REV-T151113-2

MI2 SWITCH TIMER

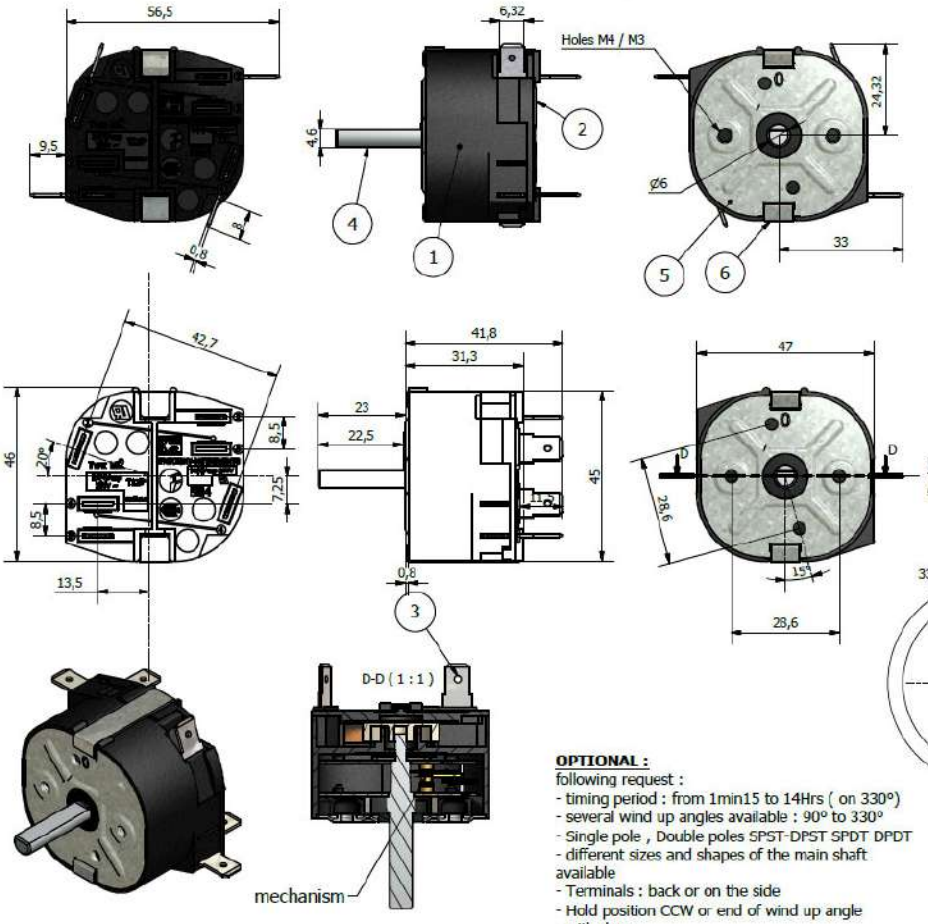

Nota : dimensions in mm.

CIRCUIT : ELECTRIC STANDARD CIRCUIT

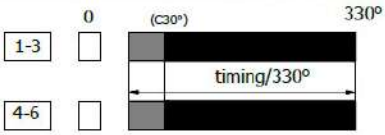

PARTS			
QTE	N°	DESCRIPTION	MATIERE
1	1	HOUSING	PA 6/6 V0 MATERIAL
1	2	SWITCH COVER	PA6/6 V0 MATERIAL
4	3	TERMINAL FASTON 6.35x0.8mm	BRASS 6.35x0.8 silver platted contact Ag-Ni 90/10
1	4	Main shaft	Steel or beric
1	5	front plate	STEEL zinc plated
2	6	lateral clips	STEEL zinc plated

DIAL ROTATION ANGLE

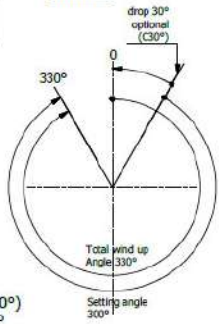

ELECTRICAL SPECIFICATIONS

SWITCHING CAPACITY 16A(4) 250V
15A(4) 120V
Terminals : 6.35 x 0.8mm TAB terminals
MI2 single or double pole SPST SPDT DPST DPDT
Back or side terminal
Supply voltage 250V a.c / 120V a.c.
Degree of protection (IP) IP00
Pollution degree 2
Resistance to heat and fire category D
Ambient temperature (T) T125°C
Degree of protection (class) II
Tracking index (PTI) PTI175
Terminals tab terminals 6,3x0,8 mm
Rated impulse voltage 2,5 kV
Contact opening full-disconnection
Rated current/voltage 16(4) A / 250 V
Type of load resistive-motor load
frequency of operation : 50.000 operating cycles
Distance between contact : >= 3mm
Approvals : UL KEMA ENEC
Rohs and Reach compliant

OPTIONAL :

following request :
- timing period : from 1min15 to 14Hrs (on 330°)
- several wind up angles available : 90° to 330°
- Single pole , Double poles SPST-DPST SPDT DPDT
- different sizes and shapes of the main shaft available
- Terminals : back or on the side
- Hold position CCW or end of wind up angle
- with drop
- fixation M3 M4 (28.6mm) or central bush M8x0.75
- maximum screw length : 4mm
- bell : single ping available after cycle

MECHANICAL SPECIFICATIONS

- Winding torque : 1.5 to 4.5 Kg (0.15 to 0.45N.m)
- return Torque to "0" position 1 to 4.5 Kg (0.1 to 0.45 N.m)
- Timing range : vibrator ±10% till 15min
  balance wheel ±5% till 15min
  (on 330°) to 14 hours
- Residual operating torque : 0.1 Kg.cm (0.01 N.m)
- Torque of manual position 4 Kg.cm (0.4 N.m)
- Max use temp. T° :125°C (256 F)

FAUCIGNY INSTRUMENTS